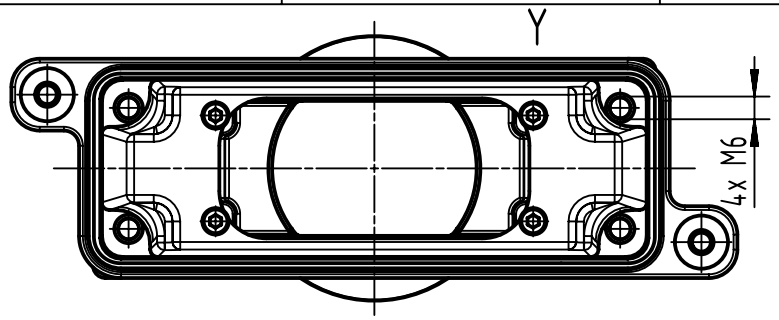

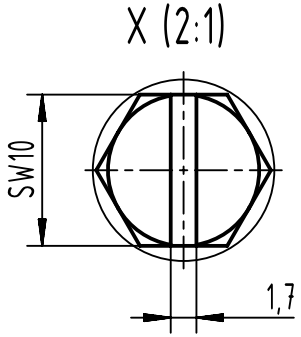

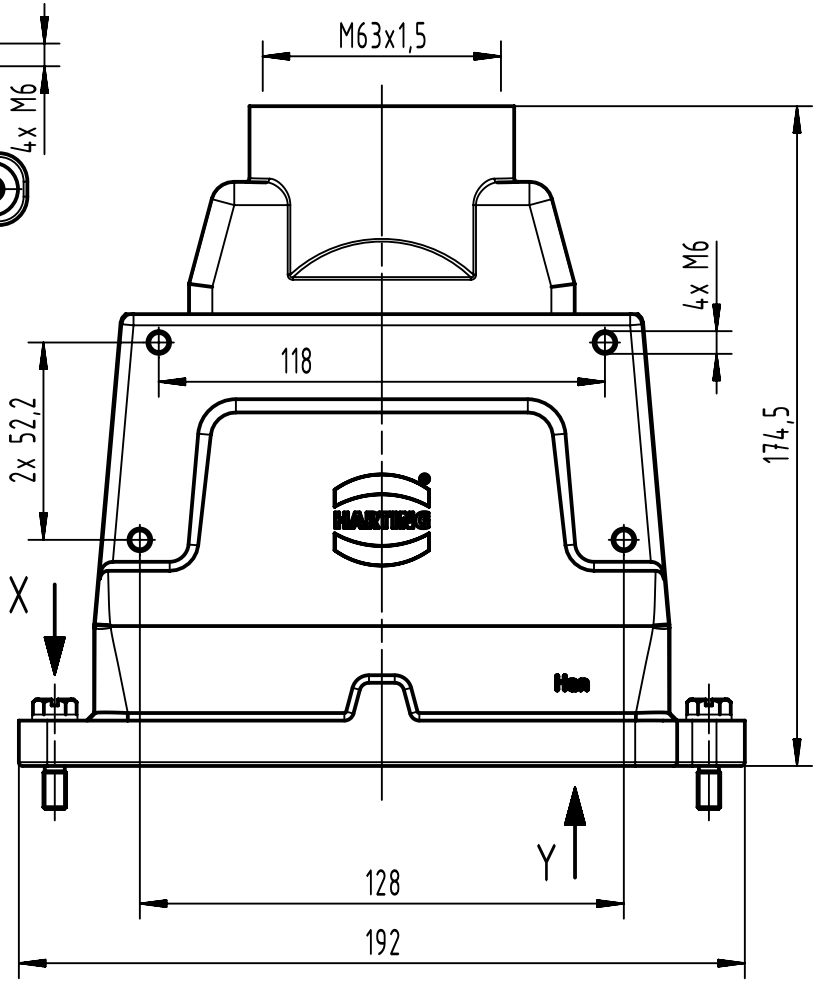

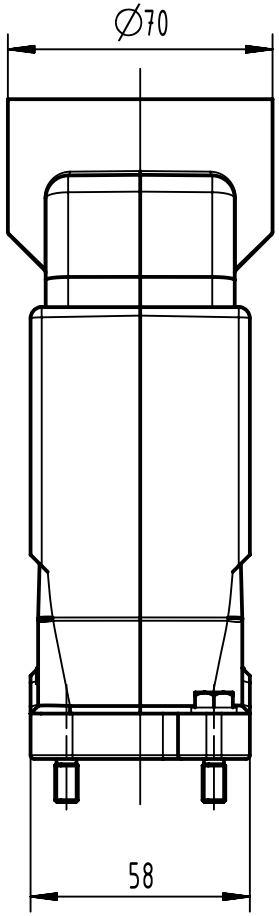

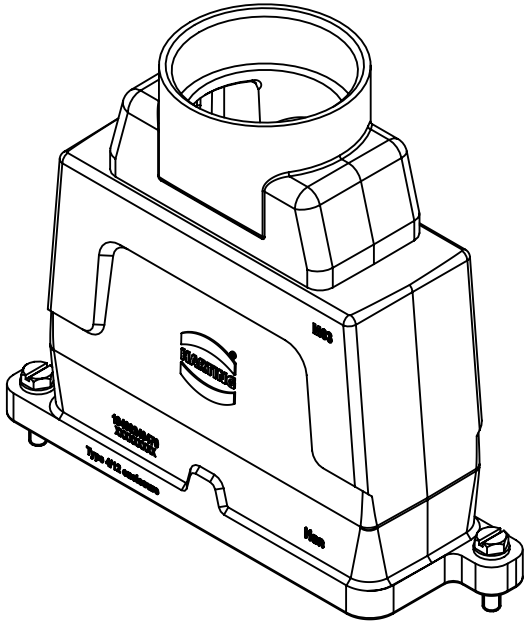

All Dimensions in mm Original Size DIN A4	Scale 1:2	Free size tol.		Ref. Sub.	
All rights reserved Department EL PD	Created by SPREENB	Inspected by SUNDERMEIER	Standardisation 302077	Date 2021-05-19	State Final Release
HARTING D-32339 Espelkamp	Title Han 24HPR-enlarged-HTE-SL-M63				Doc-Key / ECM-Nr. 100120146/UGD/006/E 500000195226
	Type TB	Number 19 40 024 0470		Rev. E	Page 1/1

A4