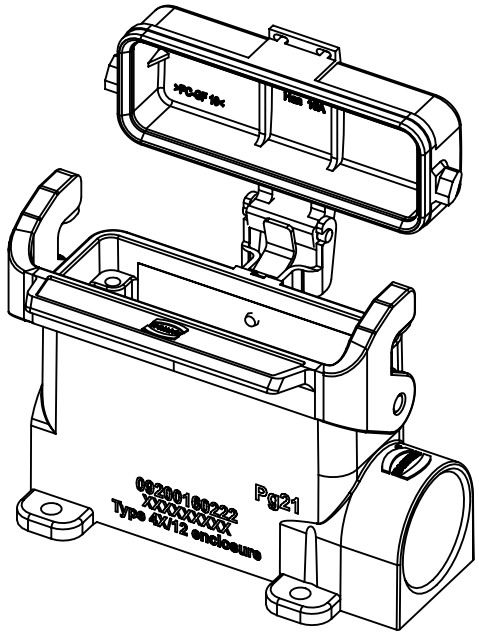

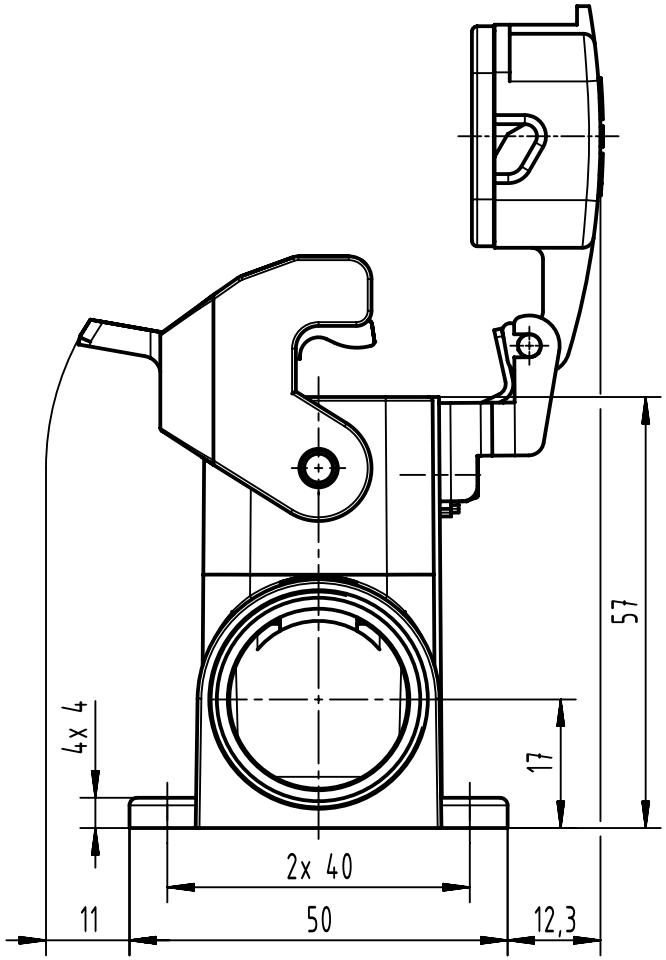

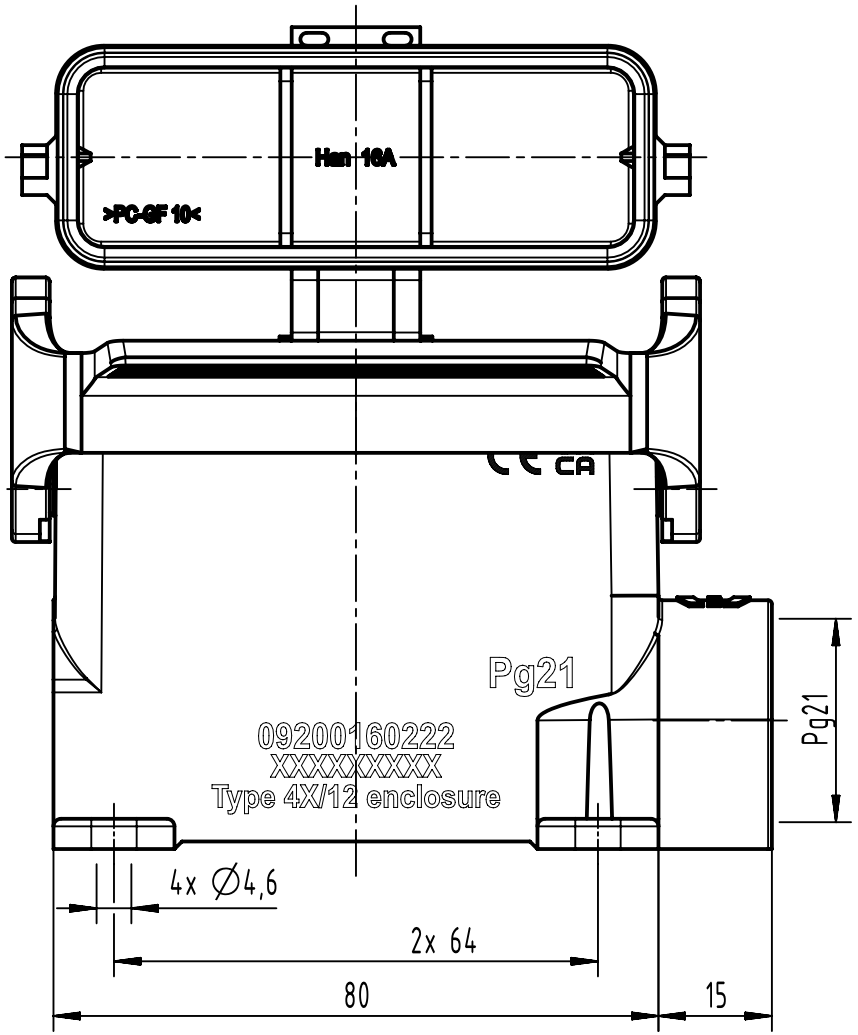

All Dimensions in mm Original Size DIN A4	Scale 1:1	Free size tol.		Ref. Sub.	
All rights reserved	Created by HOLLERT	Inspected by GERB	Standardisation	Date 2023-11-24	State Approved
Department EL PD	Title Han 16 A-asg1-LB-K-21				Doc-Key / ECM-Nr. 100186813/UGD/004/H 500000258163
HARTING D-32339 Espelkamp	Type TB	Number 09 20 016 0222		Rev. H	Page 1/1

A4