Transfer or duplication of this document as well as the utilisation or communication of its content are not permitted unless express consent is granted. Violations give rise to claims for damages. All rights reserved in case of patent, utility model or design patent registrations.

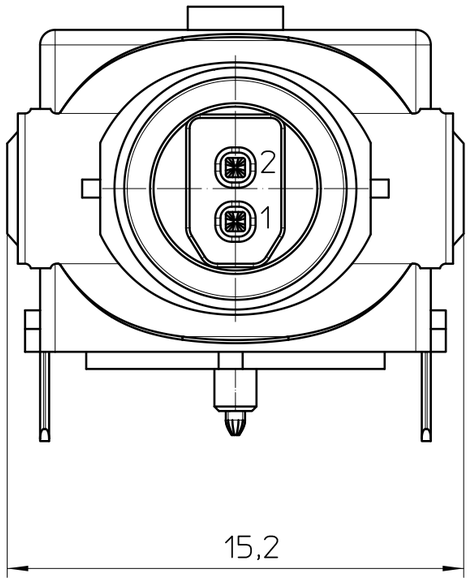


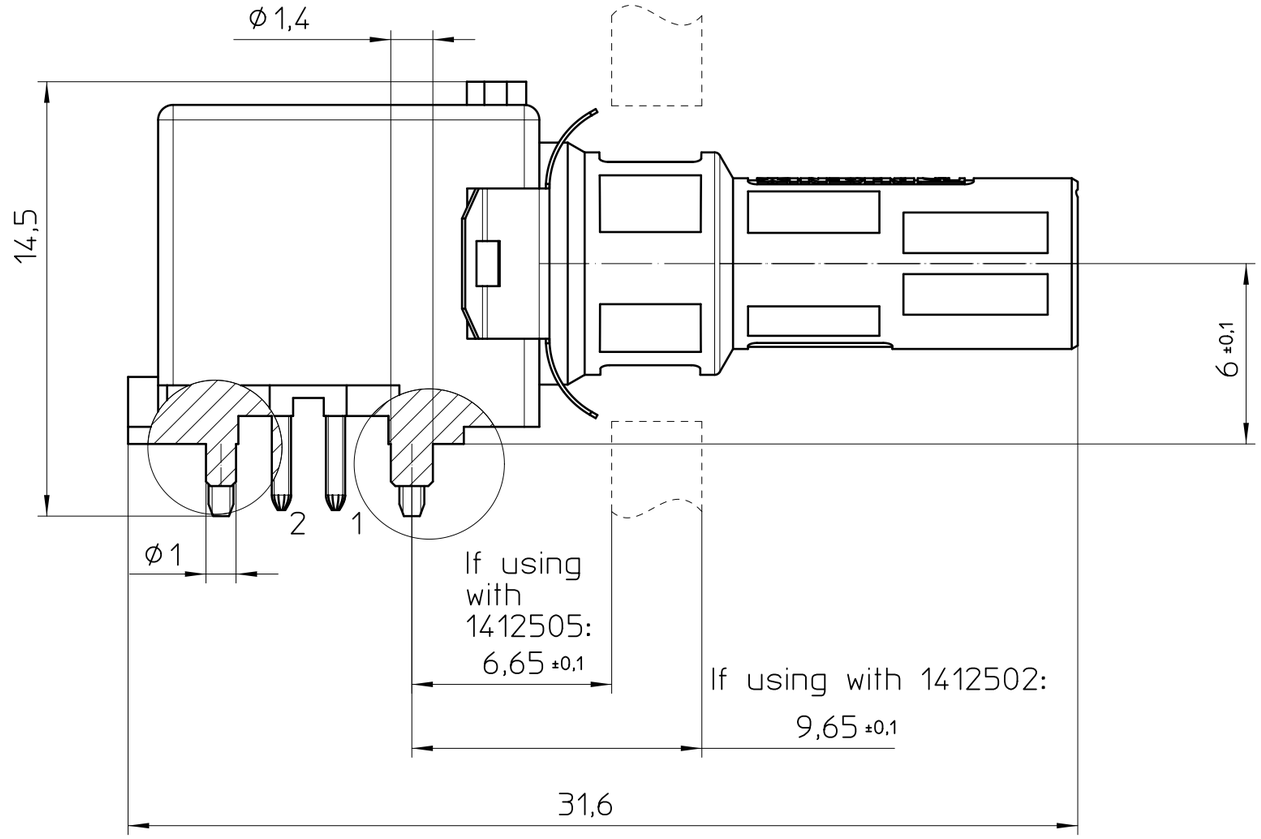


Pin assignment

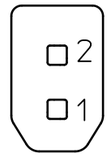


| Pair | Contacts | Data |
|---|---|---|
| 1 | 1 | RX/TX+ |
| | 2 | RX/TX- |

| Contact dimension | effective length |
|---|---|
| Contact 1 | 30.2 |
| Contact 2 | 33.8 |

## Pinning recommendation

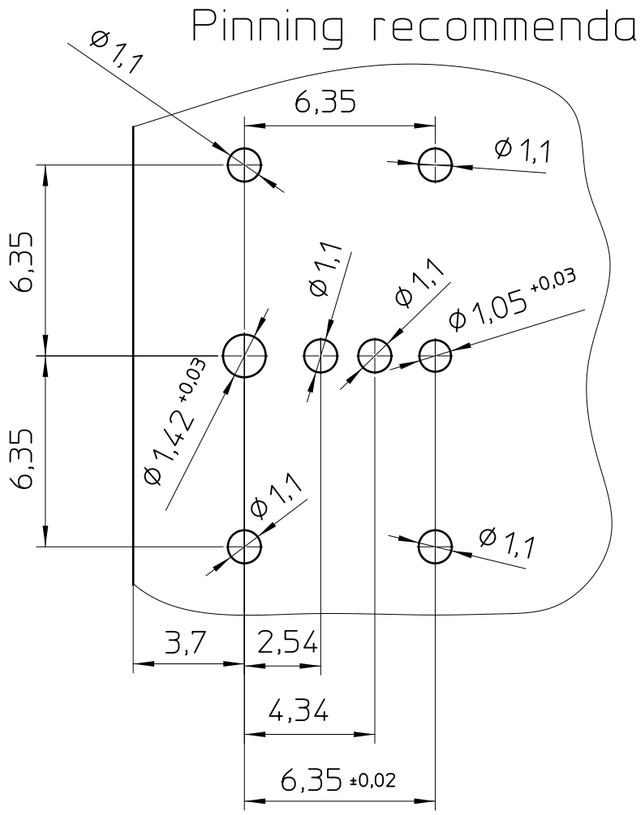


If using with 1412505:

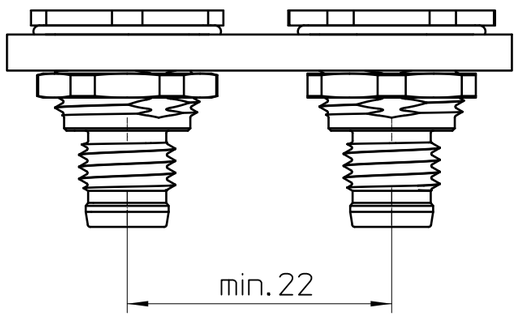


2:1

If using with 1412502:

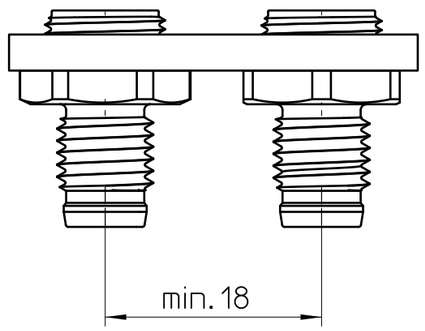


2:1

General Information
- Simplified representation
- Document excluded from change process
- Linear dimensions [mm]

| | | | |
|---|---|---|---|
| DIN A3 | document-No. / RI 01303187 / 08 | date 24.06.2021 | scale 5:1 |
| PHOENIX CONTACT | document-type TECDOC 2D_Productfamily | | |
| page 1 of 1 | description SPE-T1-M8MRM-90 | | |

Weitergabe sowie Vervielfältigung dieses Dokuments, Verwertung und Mitteilung seines Inhalts sind verboten, soweit nicht ausdrücklich gestattet. Zuwiderhandlungen verpflichten zu Schadenersatz. Alle Rechte für den Fall der Patent-, Gebrauchsmuster- oder Designeintragung vorbehalten.