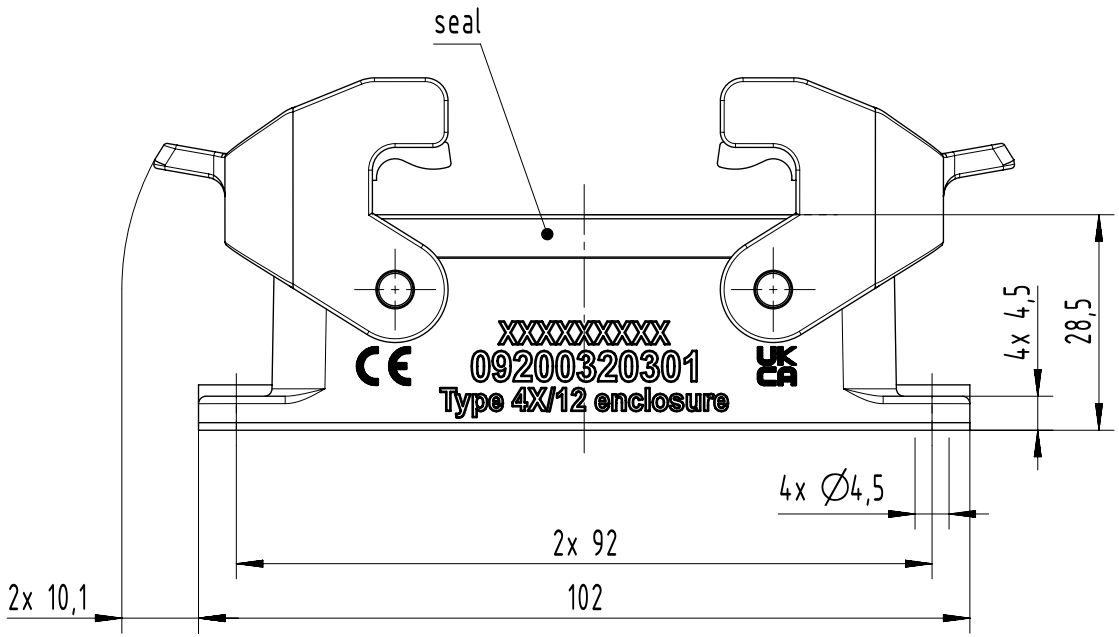

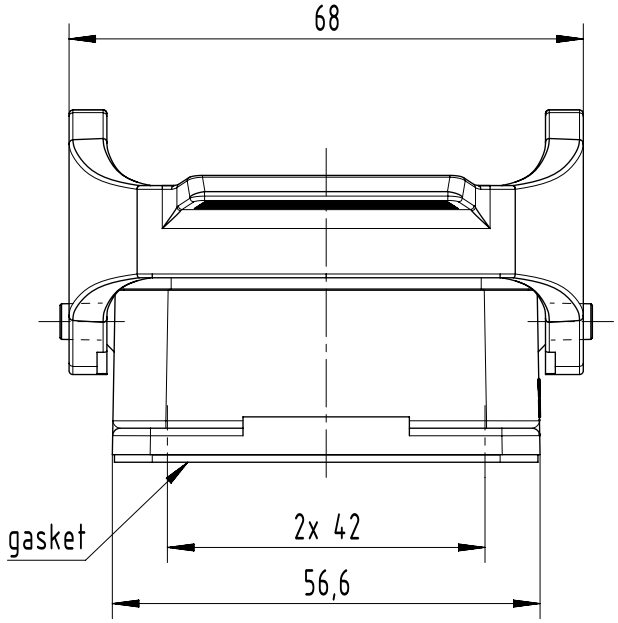

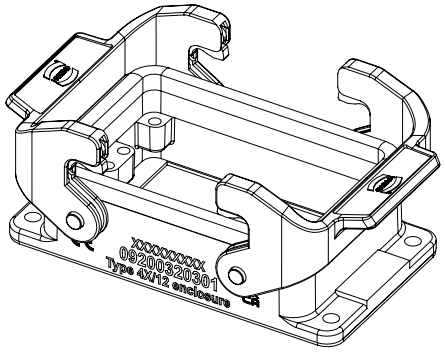

panel cut out (1:2)

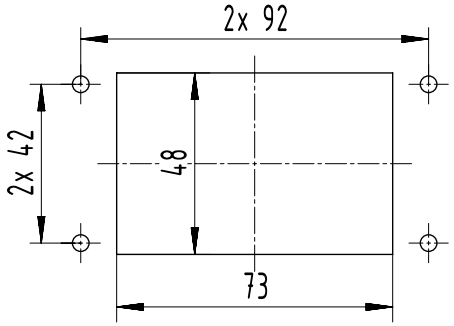

All Dimensions in mm Original Size DIN A4	Scale 1:1	Free size tol.		Ref. Sub.	
All rights reserved Department EL PD	Created by HOLLERT	Inspected by GERB	Standardisation	Date 10-Mar-2025	State 40 - Released
	Title Han A Base Panel 2 Levers				Doc-Key / ECM-Nr. 100105480/UGD/005/E 500000253323
HARTING D-32339 Espelkamp	Type TB	Number 09200320301		Rev. E	Page 1/1

A4