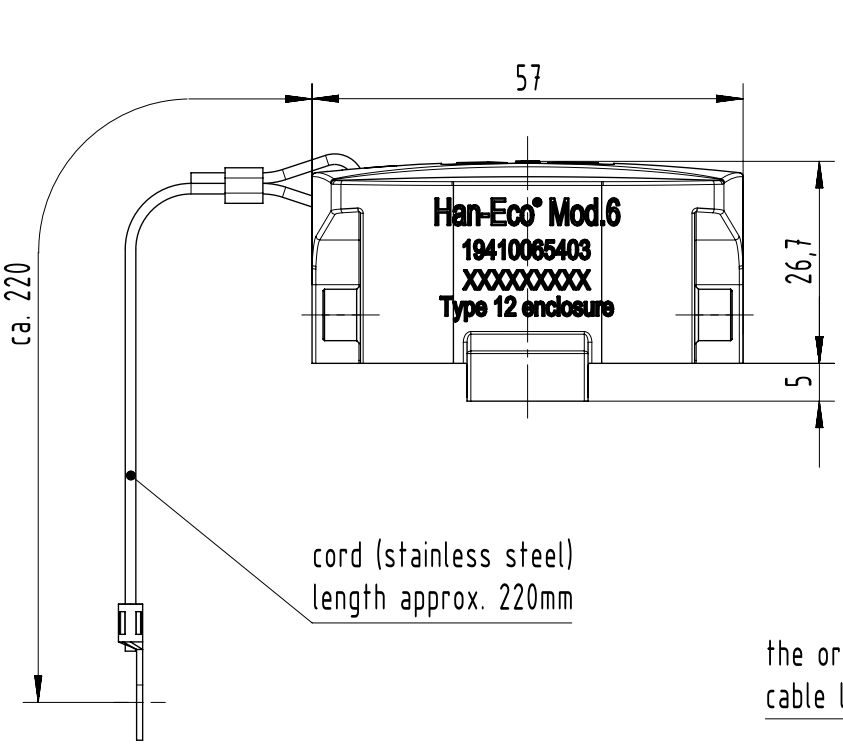

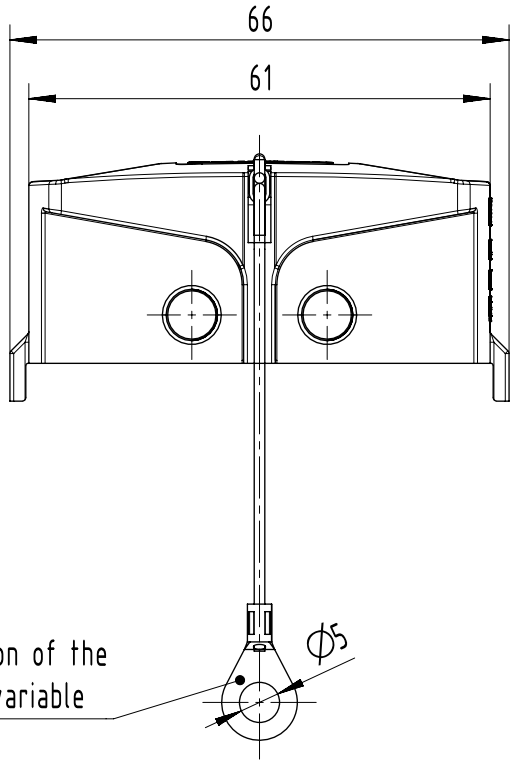

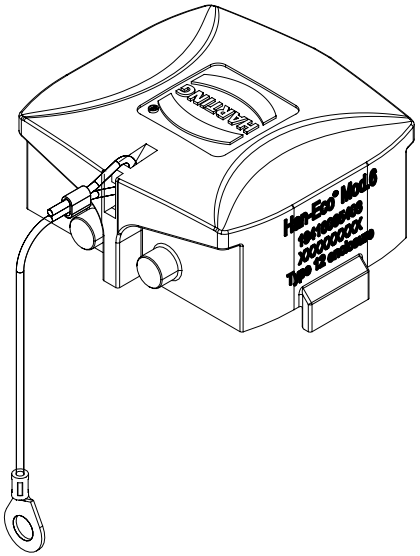

All Dimensions in mm Original Size DIN A4	Scale 1:1	Free size tol.		Ref. Sub.	
All rights reserved Department EL PD	Created by spreenb	Inspected by gerb	Standardisation	Date 07-Nov-2024	State 40 - Released
	Title Han-Eco Mod.6 protection cover w cable l				Doc-Key / ECM-Nr. DS00190229
HARTING D-32339 Espelkamp	Type TB	Design Number DS00190229	SAP Mat. Number 19410065403	Rev. G	Page 1/1

A4