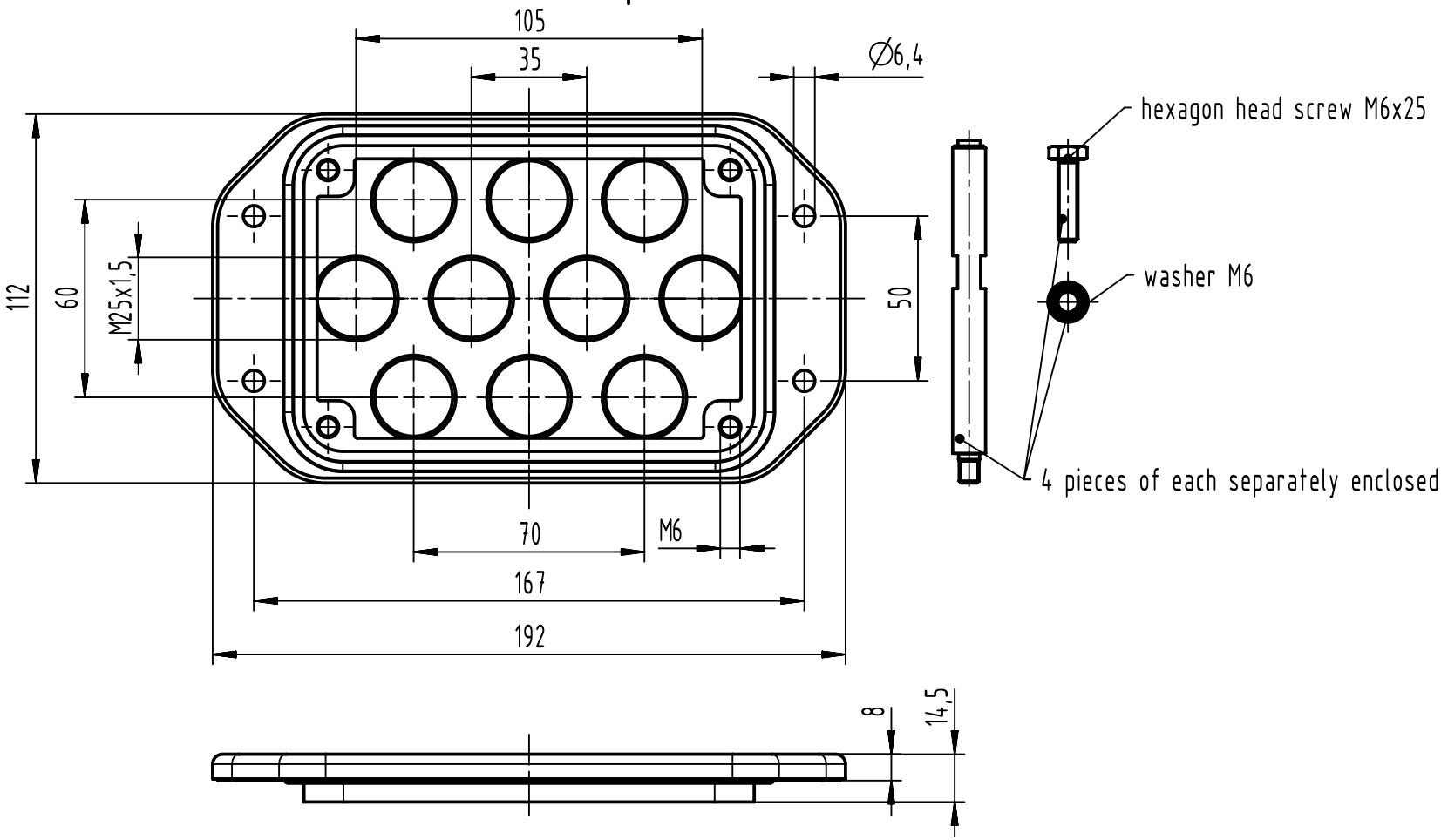

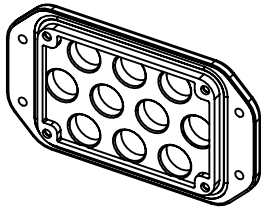

All Dimensions in mm Original Size DIN A4	Scale 1:2	Free size tol.		Ref. Sub.	
All rights reserved Department EL PD	Created by hellmann	Inspected by 105446	Standardisation	Date 20-May-2025	State 40 - Released
	Title Han 48HPR mounting cover 10XM25				Doc-Key / ECM-Nr. DS00266024
HARTING D-32339 Espelkamp	Type TB	Design Number DS00266024	SAP Mat. Number 19400489860	Rev. A	Page 1/1

A4