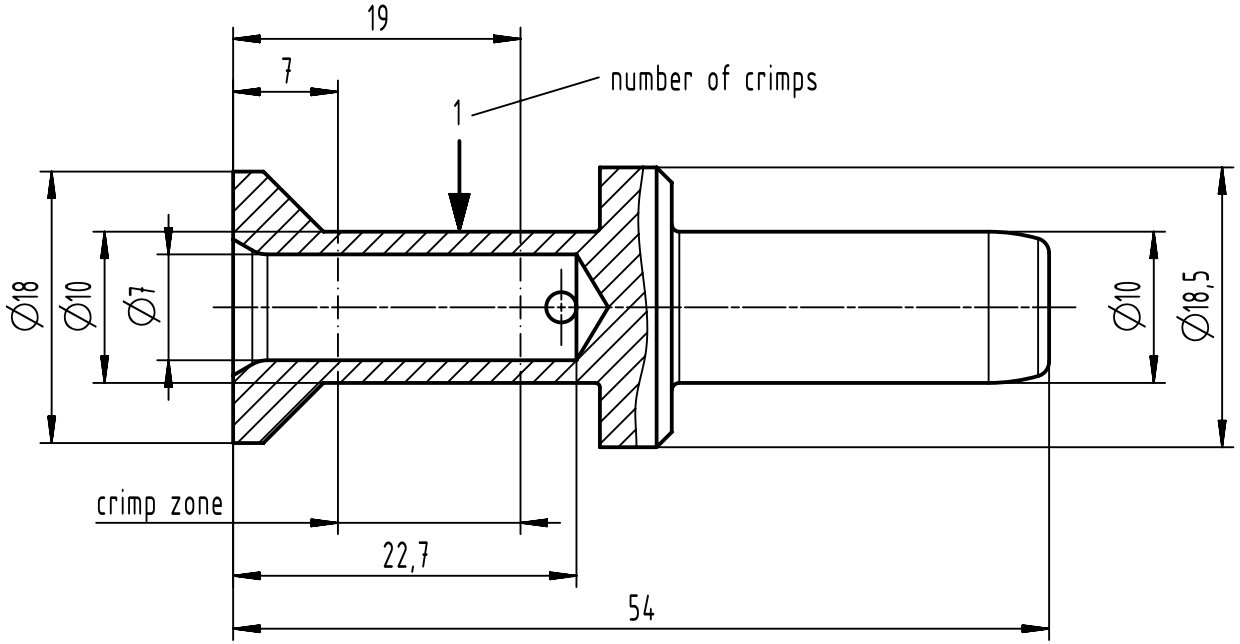

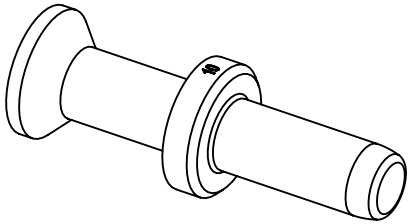

assembly notes see catalog
crimp zone acc. to DIN EN 46235; indicator 10
for stranded fine wire acc. to VDE 0295 class5/ IEC 60228 class 5
wire gauge: 25mm²
stripping length: 22mm

All Dimensions in mm Original Size DIN A4	Scale 2:1	Free size tol.		Ref. Sub.	
All rights reserved Department EL PD	Created by HELLMANN	Inspected by NICHTERLEIN	Standardisation SAP_WFRT	Date 2022-10-07	State Final Release
HARTING D-32339 Espelkamp	Title Han TC250 male contact 25mm²				Doc-Key / ECM-Nr. 100220913/UGD/003/D 500000224832
	Type TB	Number 09 11 000 6126		Rev. D	Page 1/1

A4