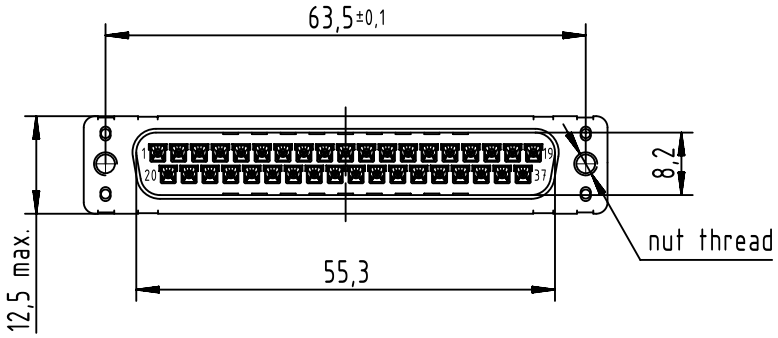

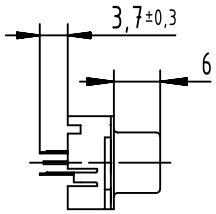

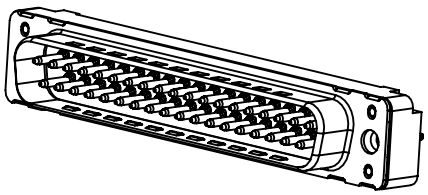

PCB layout component side
Recommended thickness 1,6 mm

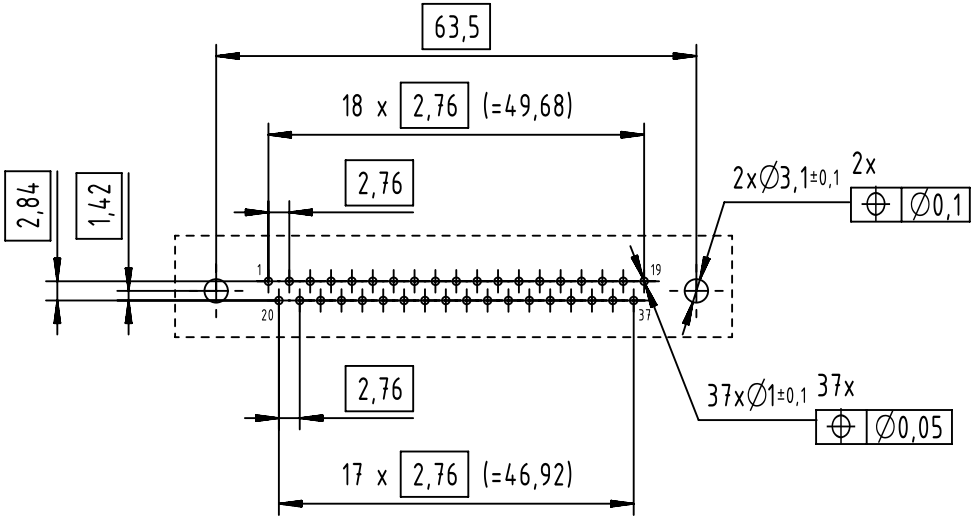

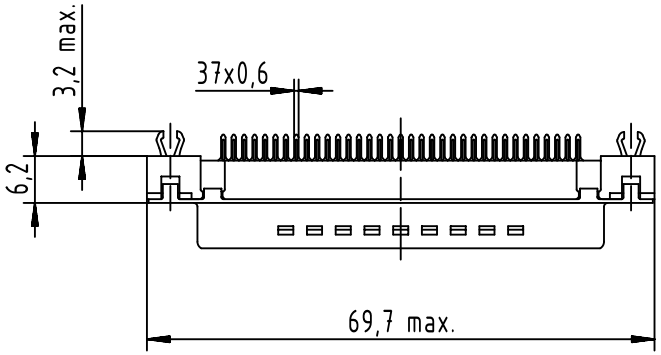

Connector retention and insertion forces on PC-Board: 25 N / 80 N

Part number	Nut thread	Performance level
09654613711	M3	PL1
09654616711	M3	PL2
09654617711	M3	PL3
09654613712	4-40UNC	PL1
09654616712	4-40UNC	PL2
09654617712	4-40UNC	PL3

All Dimensions in mm
Original Size DIN A4

All rights reserved

Department EL PD

HARTING
D-32339 Espelkamp

Scale	Free size tol.	Ref.
1:1		Sub.

Created by	Inspected by	Standardisation	Date	State
ZHUANGJ	LUOK	ROEBEN	2023-06-08	Final Release

Title: D-Sub 37-pole male straight assembly

Doc-Key / ECM-Nr.: 100593448/UGD/000/B 500000246867

Type	Number	Rev.	Page
TB	0965461X71X	B	1/1

A4