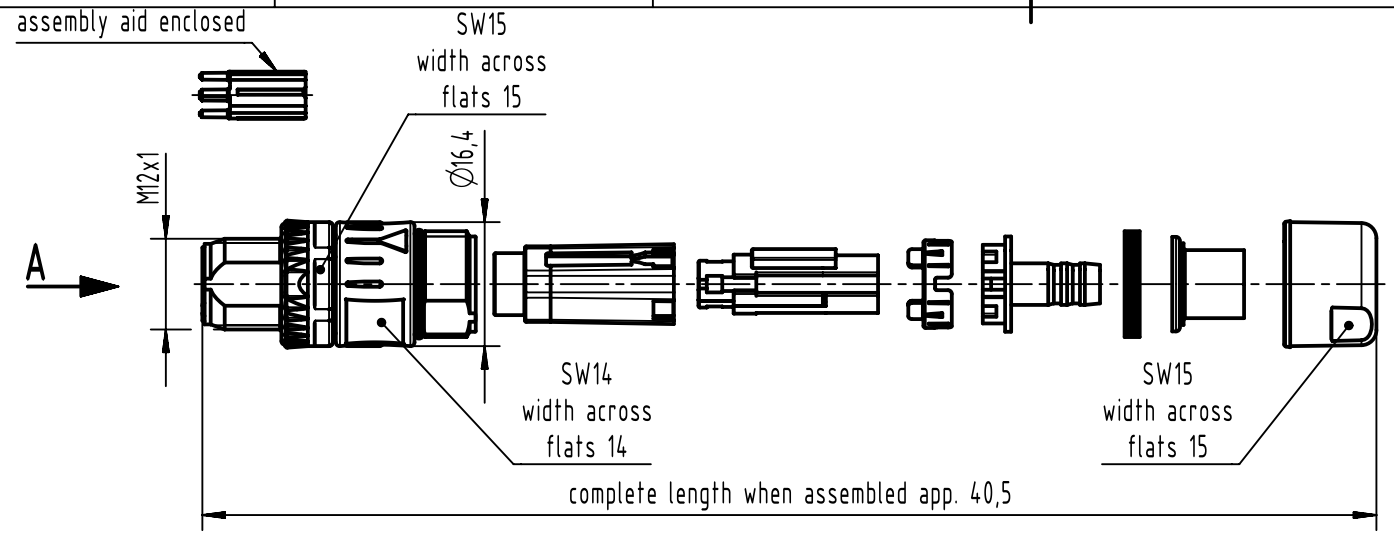

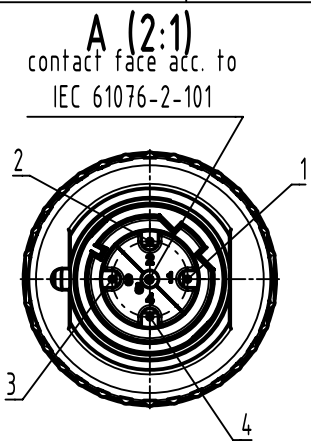

order contacts separately

Cable description	Cable diameter	Wire gauge	P/N contact	P/N Crimping insert	P/N Crimping Tool	P/N Mounting tool
BE 43800 4 PR CAT5E SF/UTP 26AWG X-FRNC	6,7mm	AWG 26-22	09 67 000 5576	0999 000 0650	0999 000 0647	0999 000 0639
BETATRANS DATA C-FLEX Cat.5 1x4 AWG 22/7 Leoni: 303195	6,6mm	AWG 26-22 AWG 24-20 AWG 22-18	09 67 000 5576 09 67 000 8576 09 67 000 3576			
Ha-VIS EtherRail® CAT 5 LSZH 4xAWG22/7 HARTING: 094560001020600						
BETAtrans GKW-ENX C-flex EN 50306-4 3P 300 V MM S 4 x 0,75, Leoni p/n: 314713	5,8	AWG 22-18	09 67 000 3576			

pin	colour
1	white/yellow
2	yellow/white
3	blue/orange
4	orange/blue

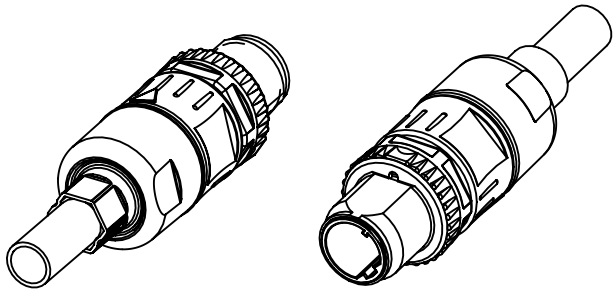

All Dimensions in mm
Original Size DIN A4

Scale 1:1

Free size tol.

Ref.

Sub.

All rights reserved

Department EL PD

HARTING
D-32339 Espelkamp

Created by SERBANA | Inspected by FARCASIU | Standardisation ROEBEN | Date 2023-09-04 | State Final Release

Title M12 SD D-cod 4-pol Crimp Flange male

Doc-Key / ECM-Nr. 100692365/UGD/001/J 500000252756

Type TB | Number 21038811411 | Rev. J | Page 1/1

A4