Alle Rechte vorbehalten/ *All rights reserved*

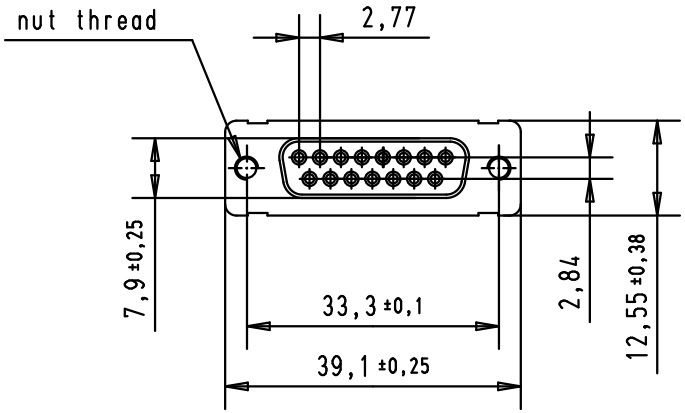

RECOMMAMDED PANEL CUTOUT DIMENSIONS
FOR REAR MOUNTING

Values are taken from the
CECC 75 301-802

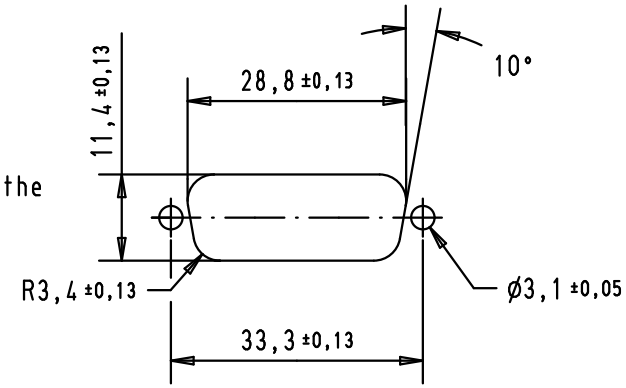

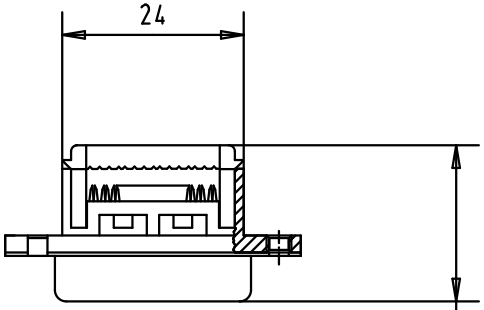

20,65 pre crimping position
18,20 after crimping position

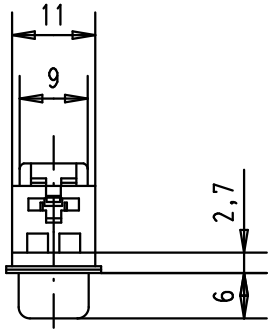

1.27 mm pitch flat cable stranded, wire sizes : AWG 26 to 28

09 66 218 7502	PL3	4-40 UNC						Dat.	Name	All Dim. in mm Orig. Size DIN A 4	D-sub, female, 15 poles, straight, IDC, nut fixing
09 66 218 6502	PL2	4-40 UNC					Detail.	19-MAR-02	CV		Maßstab/ *Scale* 1 : 1
09 66 218 7501	PL3	M3					Insp.	23-SEP-11	JB		
09 66 218 6501	PL2	M3		EC03837	23-SEP-11	BH	Stand.				
				EC01902	21-MAY-10	SC	HARTING EURL F-95972 Paris			TB 09 66 218 x50x	Blatt/ *Page* 1 / 1
part number	performance level	Nut thread		29756	19-MAR-02	CV				Sub.	
				Mod.	Dat.	Name					

Released / Freigegeben 2011/09/30-11:50:53 UTC