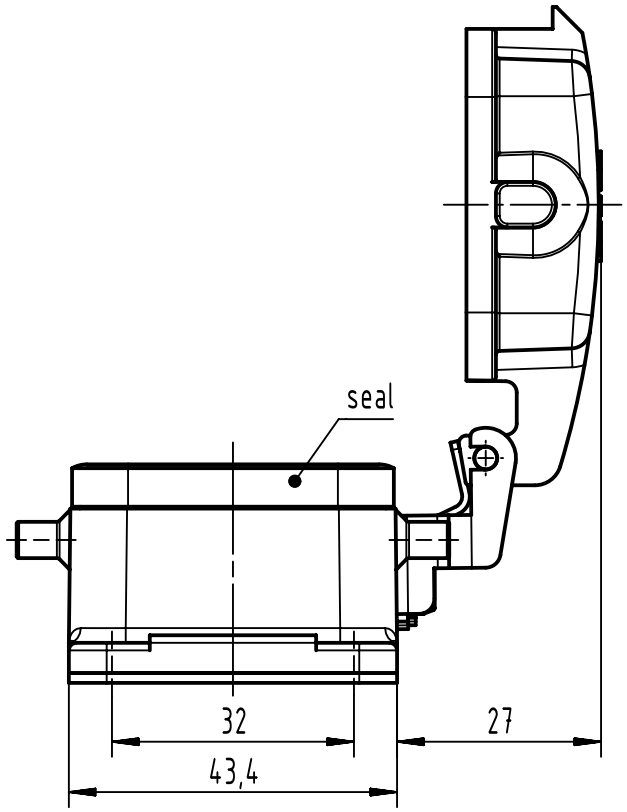

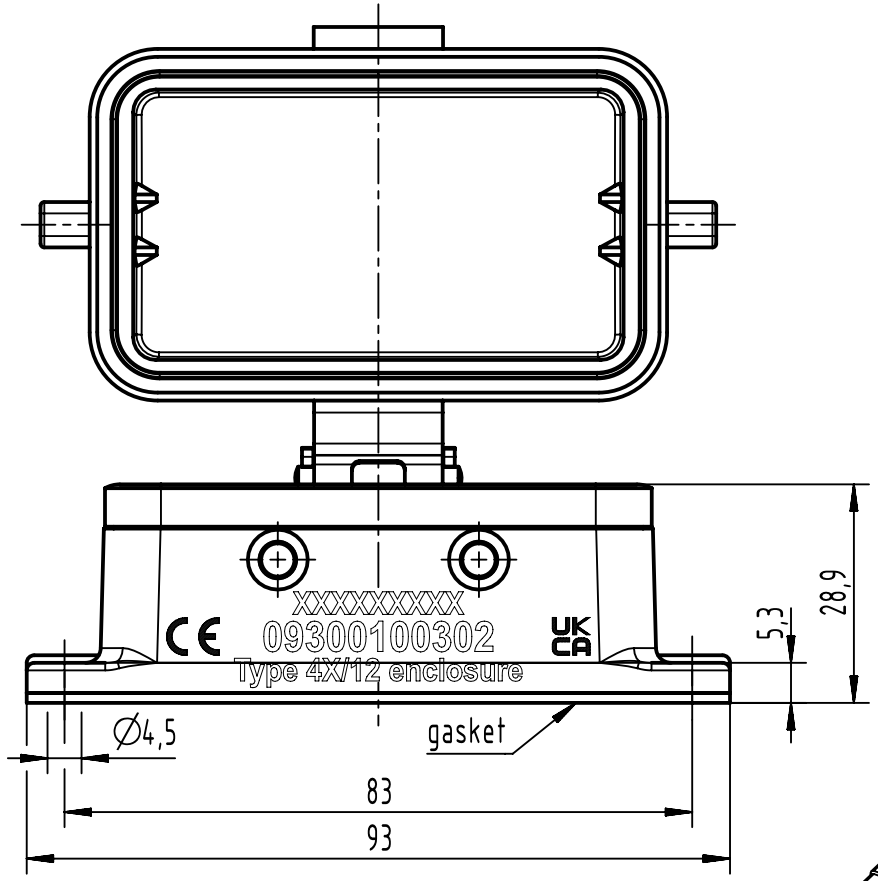

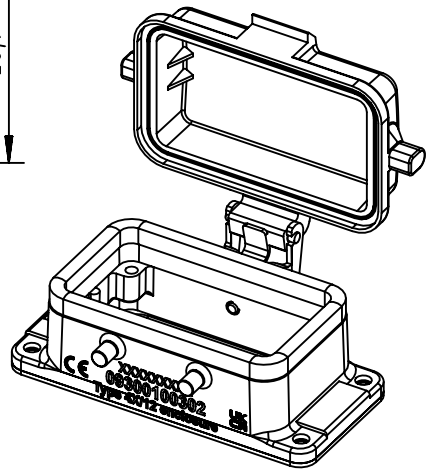

panel cut out

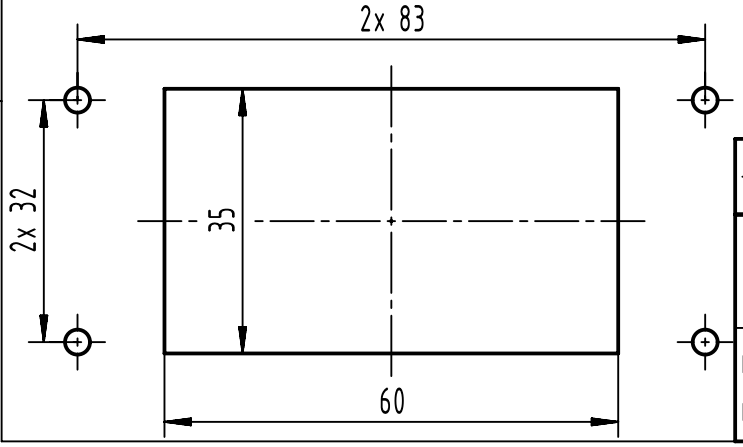

All Dimensions in mm Original Size DIN A4	Scale 1:1	Free size tol.		Ref. Sub.	
All rights reserved Department EL PD	Created by SPREENB	Inspected by GERB	Standardisation	Date 2023-09-01	State Final Release
HARTING D-32339 Espelkamp	Title Han B Base Panel 4 Pegs Thermoplastic Co				Doc-Key / ECM-Nr. 100181471/UGD/004/G 500000251427
	Type TB	Number 09 30 010 0302		Rev. G	Page 1/1

A4