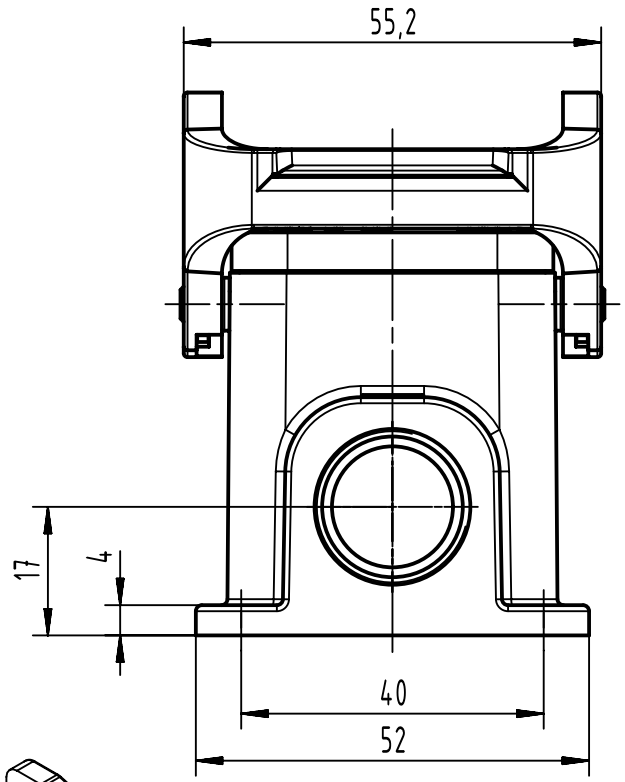

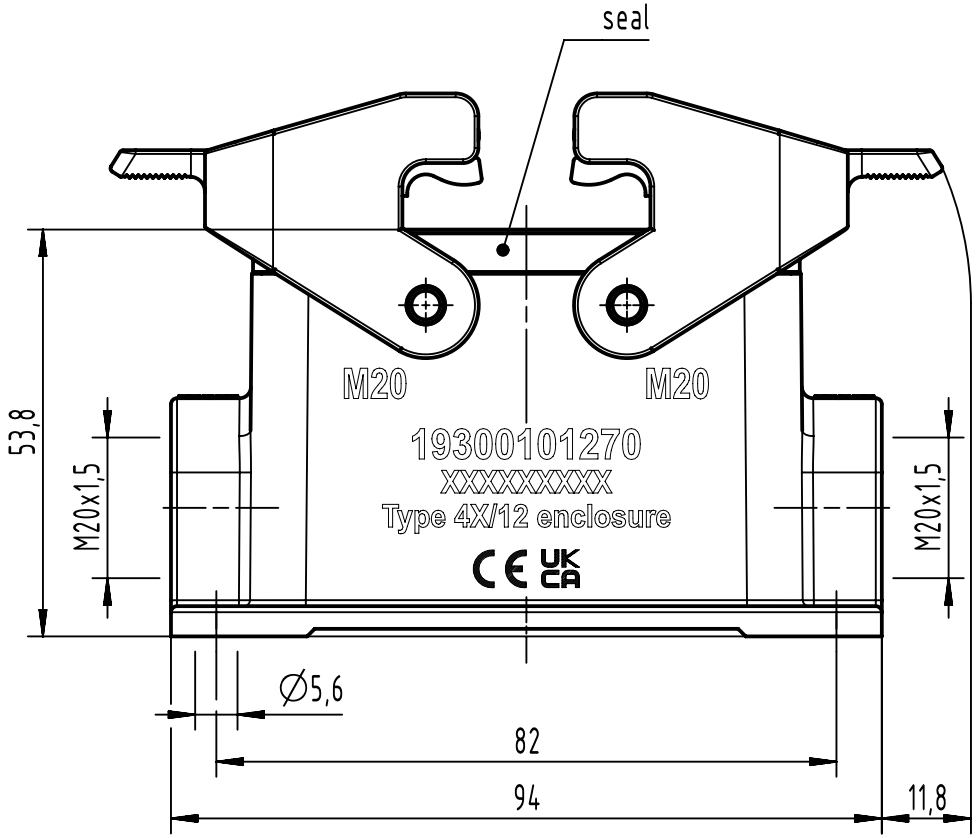

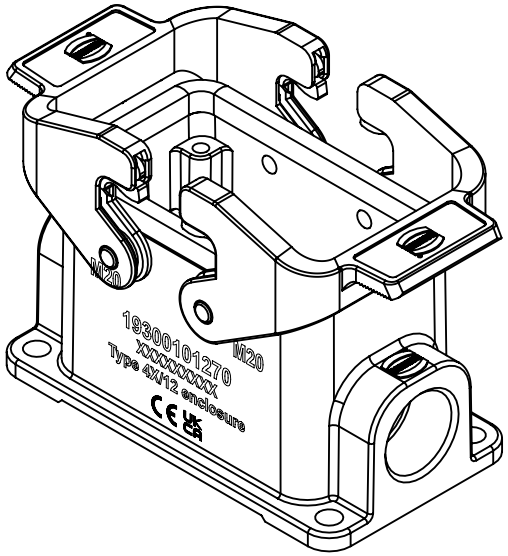

All Dimensions in mm Original Size DIN A4	Scale 1:1	Free size tol.		Ref. Sub.	
All rights reserved	Created by SPREENB	Inspected by GERB	Standardisation	Date 2023-11-06	State Final Release
Department EL PD	Title Han 10B-asg2-QB-M20				Doc-Key / ECM-Nr. 100176100/UGD/004/D 500000255790
HARTING D-32339 Espelkamp	Type TB	Number 19 30 010 1270		Rev. D	Page 1/1

A4